MID-WEST INSTRUMENT- MODEL 845-3 / 3-VALVE TEST KIT

TEST PROCEDURE – REDUCED PRESSURE PRINCIPLE ASSEMBLIES

NOTE: IT IS THE TESTER'S RESPONSIBILITY TO DETERMINE IF THIS PROCEDURE IS ACCEPTED BY LOCAL AUTHORITIES.

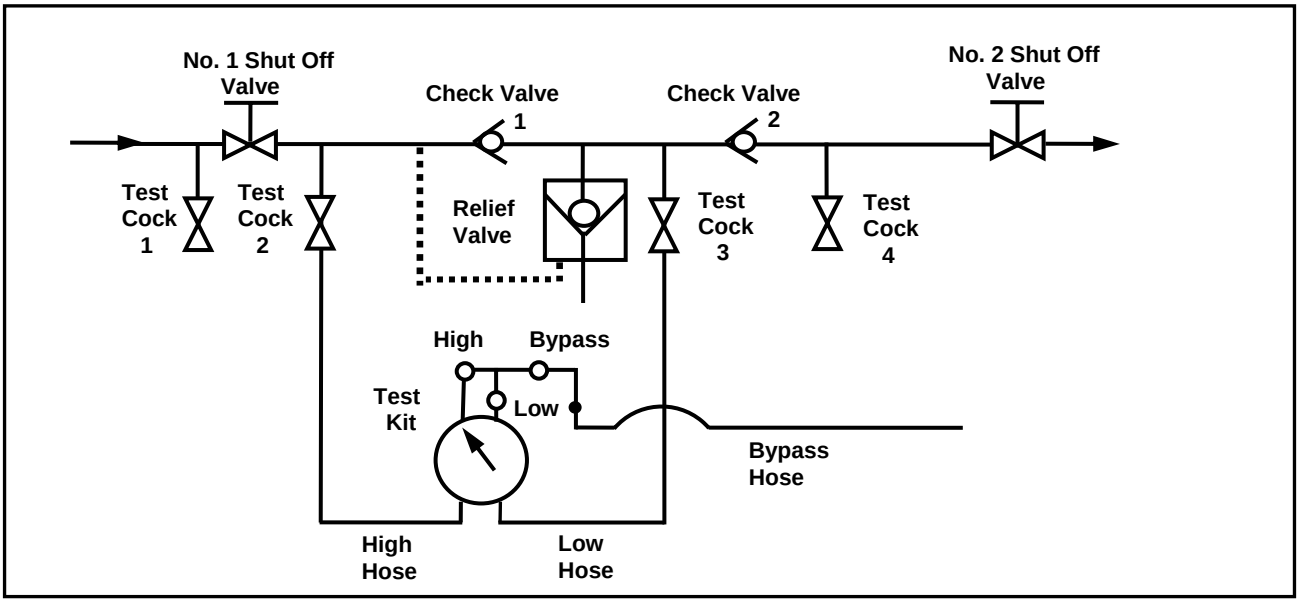

TEST SET UP:

1. Obtain permission to shut off the water supply.
2. Determine the direction of flow.
3. Identify all 4 test cocks.
4. All test kit valves are closed.

<u>TEST NO. 1</u> – DOES THE DIFFERENTIAL PRESSURE RELIEF VALVE OPERATE TO MAINTAIN THE "ZONE" BETWEEN THE TWO CHECK VALVES AT LEAST 2 PSI LESS THAN THE SUPPLY PRESSURE?

1. Open test cock 4 to establish flow through the RP. Flush test cocks taking care not to dump the relief valve; open test cock 3, **<u>SLOWLY</u>** open test cock 2, open test cock 1. Close test cocks 1, 2, 3 and 4. Install appropriate adapters in all test cocks.
2. Connect the high (left) hose to test cock 2. Connect the low (middle) hose to test cock 3.
3. Connect the black hose to the bypass (right) connection on the test kit. Fully open the bypass (right) valve.
4. **Slowly** open test cock 3. Bleed the low side through the bypass hose by opening the low (middle) valve.
5. **Slowly** open test cock 2. Bleed the high side by opening the high (left) valve.
6. Close the No. 2 shutoff valve.
7. Close the high valve. After the gauge reaches the upper part of the scale close the low and bypass valves
8. Observe the pressure drop across Check Valve 1. Should the pressure drop until the relief valve discharges continuously, check valve 1 is leaking and must be repaired before continuing.
9. Open the high (left) valve.
10. Open the low (middle) valve <u>no more than one quarter (1/4) turn.</u>
11. Watch the gauge drop **<u>slowly</u>** to the relief valve opening point – record the reading. (If the differential pressure does not drop to the relief valve opening point, close the high and low valves and go to step 13.
12. Close the high and low valves and go to Test No. 2.
13. No. 2 shutoff valve may be leaking. Reopen and close No. 2 shutoff valve to attempt a better shutoff. Repeat steps 9 through 11. If the relief valve does not open, a by-pass hose is required. (Large leaks may require a garden hose.)
14. Attach a hose (not supplied with Test Kit) to test cock 1. Bleed hose by opening test cock 1. Close test cock 1.

15. Connect the hose from test cock 1 to test cock 4.
16. Open test cock 1 to pressurize the hose.
17. **SLOWLY** open test cock 4. Repeat steps 9 through 11. If the relief valve does not open, the leaky No. 2 shutoff valve must be repaired.

TEST NO. 2 – IS CHECK VALVE 2 PRESSURE TIGHT AGAINST BACK PRESSURE?

NO BYPASS HOSE USED IN TEST 1.

1. Bleed bypass hose by opening the high (left) and bypass (right) valves. Close the bypass valve.
2. Attach the bypass (right) hose to test cock 4. Open test cock 4.
3. Loosen the low side hose at test cock 3 until the gauge reaches the upper part of the scale. Re-tighten the low hose at test cock 3.
4. Open the bypass (right) valve.
   - If the differential pressure stabilizes above the relief valve opening point, check valve 2 is recorded as "tight" (Proceed to Test No. 3).
   - If the reading falls to the relief valve opening point loosen the low hose at test cock 3 until the reading rises above the apparent No. 1 check valve pressure drop. Re-tighten the low hose.
     - If the reading stabilizes above the relief valve opening point, check valve 2 is recorded as "tight" (proceed to Test No. 3).
     - If the reading falls to the relief valve opening point again, check valve 2 is noted as leaking and test No. 3 cannot be completed.

BYPASS HOSE USED IN TEST 1.

1. Leave the bypass hose connected between test cocks 1 and 4.
2. Leave test cocks 1 and 4 open.
3. Open the low (middle) and bypass (right) valves allowing the pointer to reach the upper part of the scale. Close the low and bypass valves.
4. If the differential pressure stabilizes above the relief valve opening point, check valve 2 is recorded as "tight". (Proceed to Test No. 3.) If the reading falls to the relief valve opening point, check valve 2 is recorded as "leaking" and Test No. 3 cannot be completed.

TEST NO. 3 – IS THE STATIC PRESSURE DROP ACROSS CHECK VALVE 1 AT OR ABOVE 5 PSID?

NO BYPASS HOSE USED IN TESTS 1 AND 2.

1. Close the high (left) and bypass (right) valves. Close test cock 4 and disconnect the bypass hose.
2. Open the low (middle) and bypass (right) valves allowing the pointer to reach the upper end of the scale. Close the low and bypass valves.
3. Allow the gauge reading to stabilize. Record this reading as the static pressure drop across check valve 1.

BYPASS HOSE USED IN TESTS 1 AND 2.

1. Open the low (middle) and bypass (right) valves allowing the pointer to reach the upper end of the scale. Close the low and bypass valves
2. Allow the gauge reading to stabilize. Record this reading as the static pressure drop across check valve 1.

Wrap Up: Close all test cocks. Open the No. 2 shutoff valve. Remove all test equipment. ***DRAIN TEST KIT.***

Values recorded from Tests #'s 1, 2 & 3	**Acceptable Results**
Test No. 1: Relief Valve Opening Point = _____._____	2.0 PSID or higher
Test No. 2: Check Valve No. 2 – Tight / Leaking	Tight
Test No. 3: Check Valve No. 1 = _____._____	5.0 PSID or higher

6500 Dobry Drive, Sterling Heights, MI 48314 Tel: 800-648-5778 or 586-254-6500 Fax: 586-254-6509
E-mail: sales@midwestinstrument.com Website: www.midwestinstrument.com